Series 100 – sprue grippers, clamping diameter 10 mm – single-acting

Product notes

- Grippers with wide jaw opening for large gates
- Gap-free closing for flat gates
- Housings and gripper jaws consist of an anodized, high-strength aluminum alloy (except GR04.100XW)
- Model P with parrot beak for tightly seated sprues or undercuts
- Model R with rotating gripper jaws for conical sprues
- Model XW with extra wide steel jaws
- Model B with rounded gripper jaws for large/inclined gates
- Model U for special gripper jaws; the closing force depends on the shape of the gripper jaws
- Model S with sawtooth profile for higher grip force
- Model H with replaceable HNBR pads for gentle handling
- Index 1N and 1P for direct monitoring; large-area sensor operation, regardless of the position of the gate in the gripper
- Index 2N and 2P for teachable sensors, direct/indirect sensor monitoring
- Index 3N and 3P for indirect monitoring; signal triggering if no component has been gripped; no moving parts and thus increased mechanical stability
- Single-acting
- Medium: filtered and oiled/non-oiled air
- Ambient air temperature: -20°C to +80°C (-4 °F to 176 °F)
- Ambient air temperature for sprue grippers with sensor: -20°C to +75°C (-4 °F to 167 °F)

Technical data

Item no.	Jaw	Operating pressure [bar (psi)]	Sensor	Electric connection	Cable length [mm]	Closing force at 6 bar (87 psi) [N]	Weight [g]	Accessories
GR04.100	Standard	2.5 - 8 (36.3 - 116)	without	--	--	22	49	Sprue wiper: GR04.100-30
GR04.100-1N	Standard	2.5 - 8 (36.3 - 116)	NPN, direct monitoring, one freely adjustable switching point	3-pin male M8 connector	200	22	52	Connecting cable: 20.503 Sprue wiper: GR04.100-30
GR04.100-1P	Standard	2.5 - 8 (36.3 - 116)	PNP, direct monitoring, one freely adjustable switching point	3-pin male M8 connector	200	22	52	Connecting cable: 20.503 Sprue wiper: GR04.100-30
GR04.100-2N	Standard	2.5 - 8 (36.3 - 116)	NPN, direct/indirect monitoring, two freely adjustable switching points teachable	4-pin male M8 connector	500	22	53	Connecting cable: 20.501 Connecting cable: 20.581 Connecting cable: 20.502
GR04.100-2P	Standard	2.5 - 8 (36.3 - 116)	PNP, direct/indirect monitoring, two freely adjustable switching points teachable	4-pin male M8 connector	500	22	53	Connecting cable: 20.501 Connecting cable: 20.581 Connecting cable: 20.502
GR04.100-3N	Standard	2.5 - 8 (36.3 - 116)	NPN, indirect monitoring	3-pin male M8 connector	150	22	50	Connecting cable: 20.503 Sprue wiper: GR04.100-30
GR04.100-3P	Standard	2.5 - 8 (36.3 - 116)	PNP, indirect monitoring	3-pin male M8 connector	150	22	50	Connecting cable: 20.503 Sprue wiper: GR04.100-30
GR04.100R	Standard rotatable	2.5 - 8 (36.3 - 116)	without	--	--	22	85	--
GR04.100S	Sawtooth jaws straight	2.5 - 8 (36.3 - 116)	without	--	--	22	49	Sprue wiper: GR04.100-30

Technical data

Item no.	Jaw	Operating pressure [bar (psi)]	Sensor	Electric connection	Cable length [mm]	Closing force at 6 bar (87 psi) [N]	Weight [g]	Accessories
GR04.100S-1N	Sawtooth jaws straight	2.5 - 8 (36.3 - 116)	NPN, direct monitoring, one freely adjustable switching point	3-pin male M8 connector	200	22	52	Connecting cable: 20.503 Sprue wiper: GR04.100-30
GR04.100S-1P	Sawtooth jaws straight	2.5 - 8 (36.3 - 116)	PNP, direct monitoring, one freely adjustable switching point	3-pin male M8 connector	200	22	52	Connecting cable: 20.503 Sprue wiper: GR04.100-30
GR04.100U	Universal	2.5 - 8 (36.3 - 116)	without	--	--	22	44	Exchangeable jaws: GR04.103-1 Exchangeable jaws: GR04.103-2 Exchangeable jaws: GR04.103-3 Exchangeable jaws: GR04.103-4
GR04.100H	HNBR Pad	2.5 - 8 (36.3 - 116)	without	--	--	22	46	HNBR pad: GR04.103-4 HNBR Sprue wiper: GR04.100-30
GR04.100H-2N	HNBR Pad	2.5 - 8 (36.3 - 116)	NPN, direct/indirect monitoring, two freely adjustable switching points teachable	4-pin male M8 connector	500	22	50	Connecting cable: 20.501 Connecting cable: 20.581 Connecting cable: 20.502 HNBR pad: GR04.103-4 HNBR
GR04.100H-2P	HNBR Pad	2.5 - 8 (36.3 - 116)	PNP, direct/indirect monitoring, two freely adjustable switching points teachable	4-pin male M8 connector	500	22	50	Connecting cable: 20.501 Connecting cable: 20.581 Connecting cable: 20.502 HNBR pad: GR04.103-4 HNBR
GR04.100HNBR	Fully HNBR-coated	2.5 - 8 (36.3 - 116)	without	--	--	22	48	Sprue wiper: GR04.100-30
GR04.100B	Sawtooth jaws round	2.5 - 8 (36.3 - 116)	without	--	--	22	49	Sprue wiper: GR04.100-30
GR04.100P	Parrot	2.5 - 8 (36.3 - 116)	without	--	--	22	49	Sprue wiper: GR04.100-30
GR04.100P-1N	Parrot	2.5 - 8 (36.3 - 116)	NPN, direct monitoring, one freely adjustable switching point	3-pin male M8 connector	200	22	61	Connecting cable: 20.503 Sprue wiper: GR04.100-30
GR04.100P-1P	Parrot	2.5 - 8 (36.3 - 116)	PNP, direct monitoring, one freely adjustable switching point	3-pin male M8 connector	200	22	61	Connecting cable: 20.503 Sprue wiper: GR04.100-30
GR04.100XW	Xwide	2.5 - 8 (36.3 - 116)	without	--	--	22	85	--

Dimensions

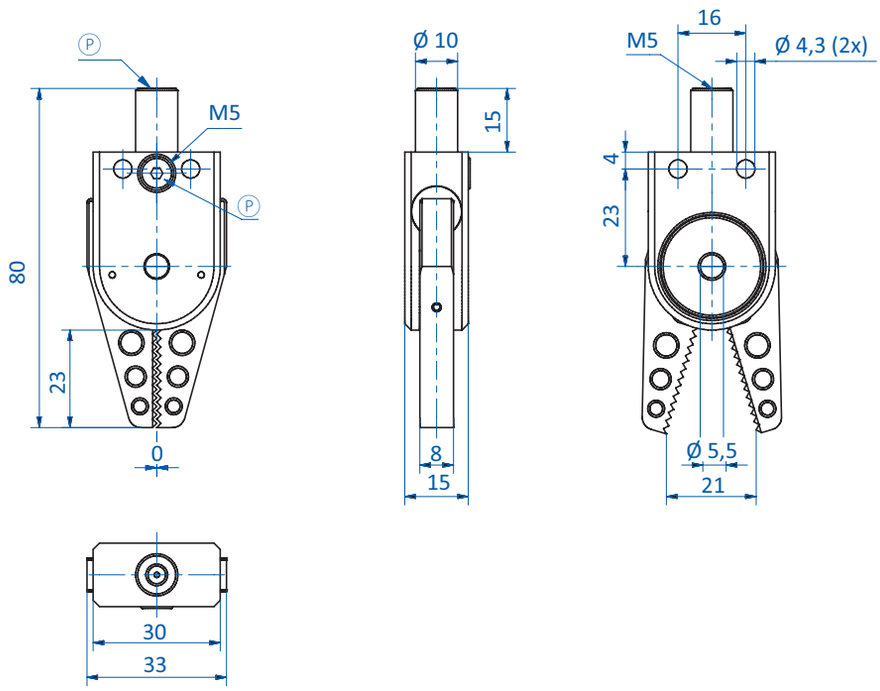

GR04.100

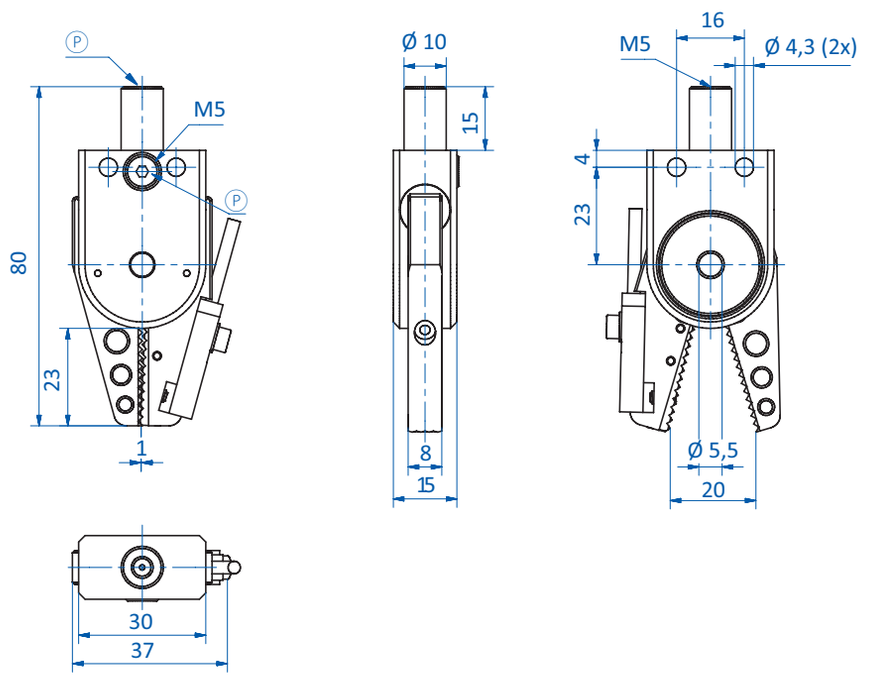

GR04.100-1N | GR04.100-1P

Ⓟ = Compressed air connection

Dimensions

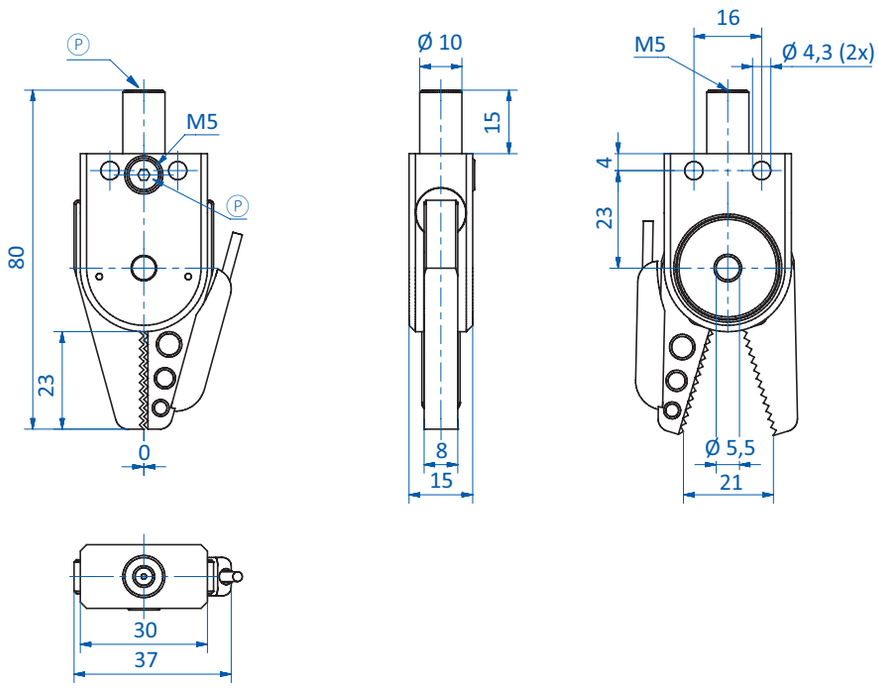

GR04.100-2N | GR04.100-2P

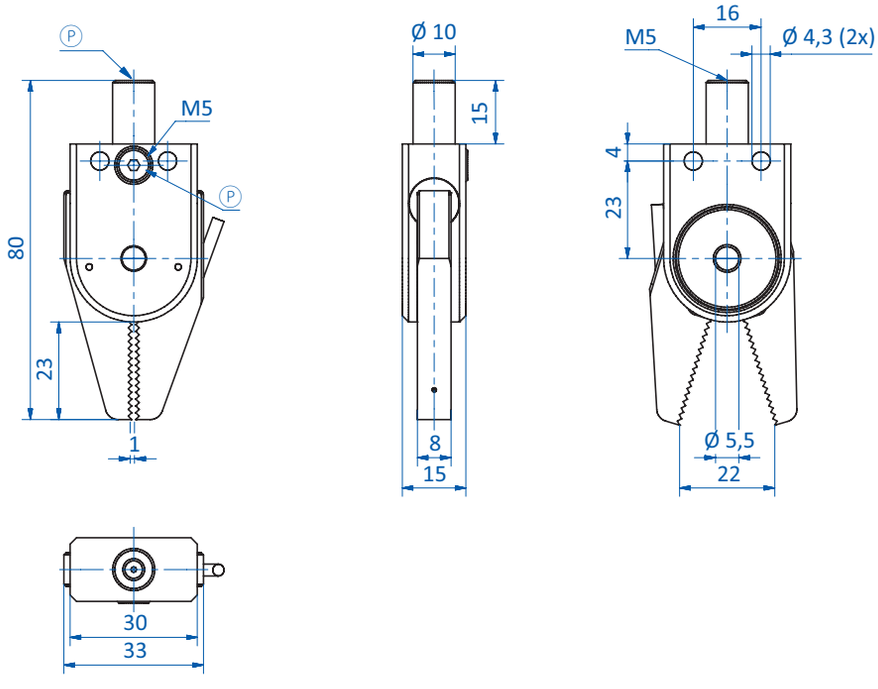

GR04.100-3N | GR04.100-3P

Ⓟ = Compressed air connection

Dimensions

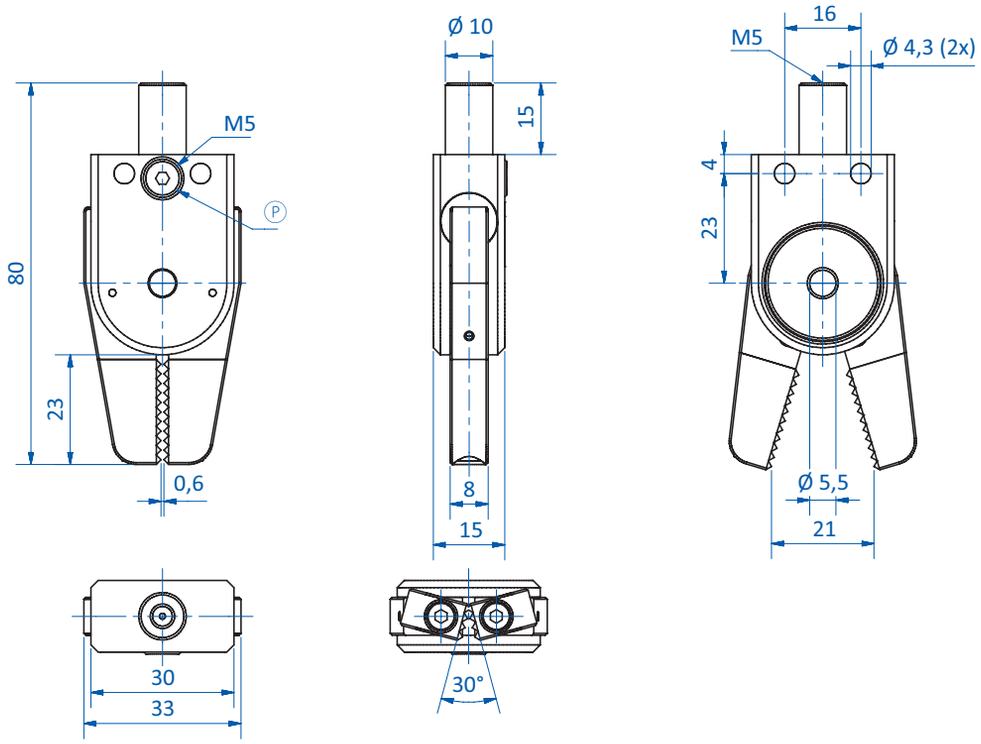

GR04.100R

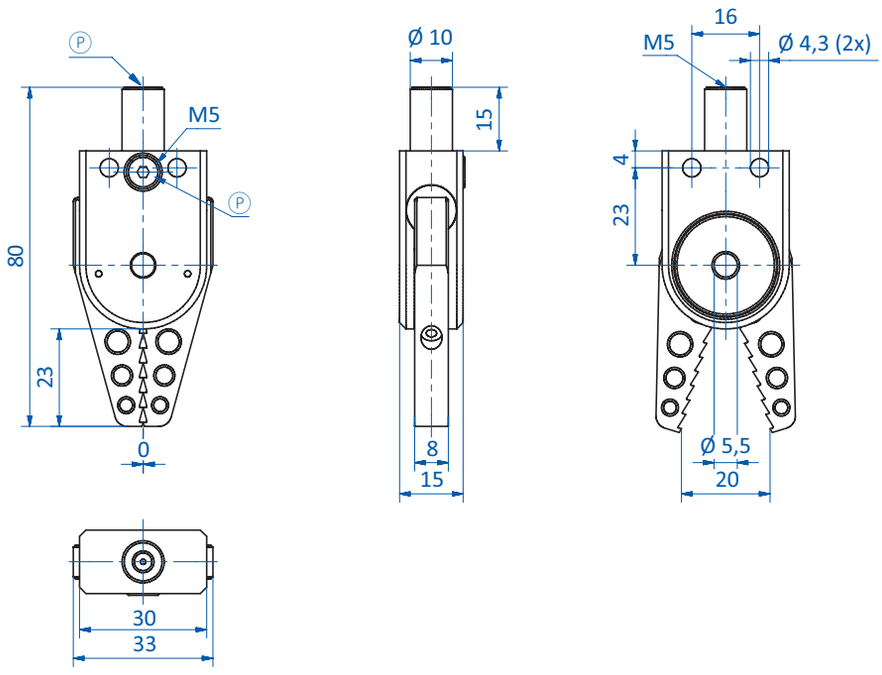

GR04.100S

Ⓟ = Compressed air connection

Dimensions

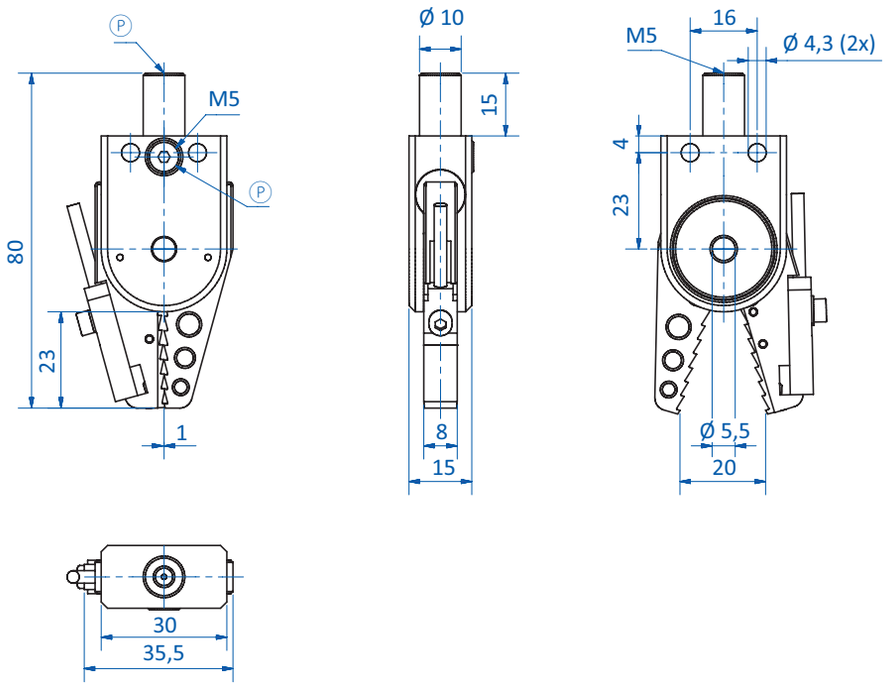

GR04.100S-1N | GR04.100S-1P

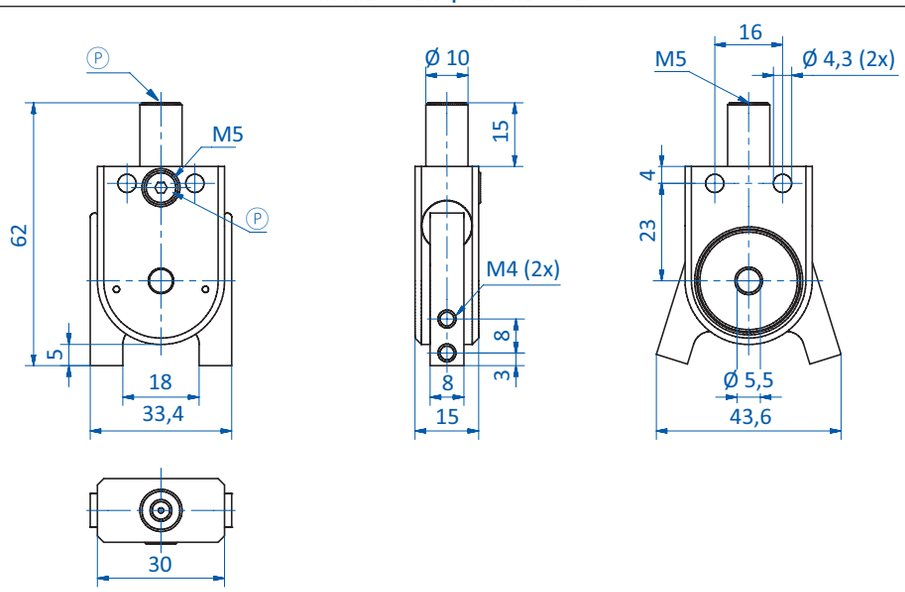

GR04.100U

Ⓟ = Compressed air connection

Dimensions

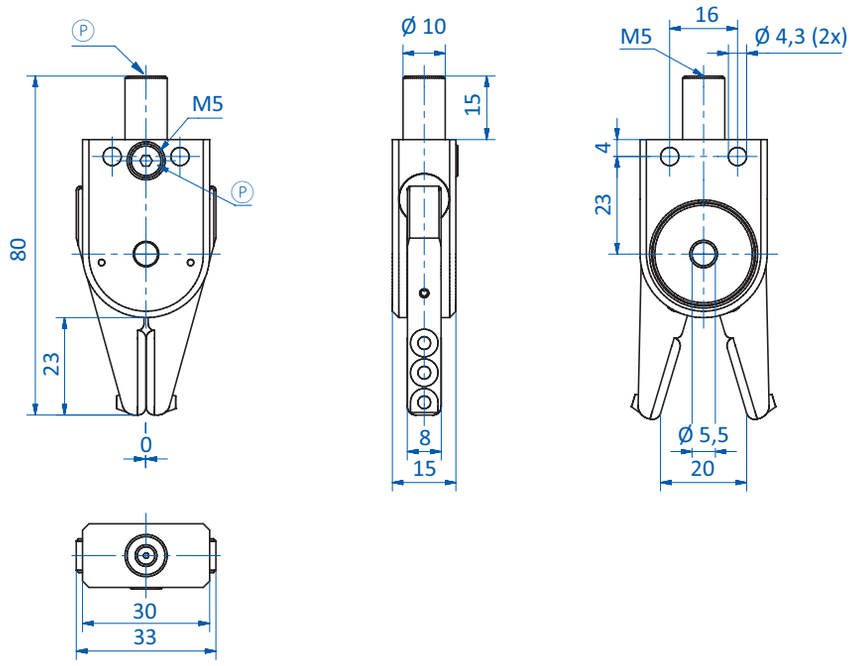

GR04.100H

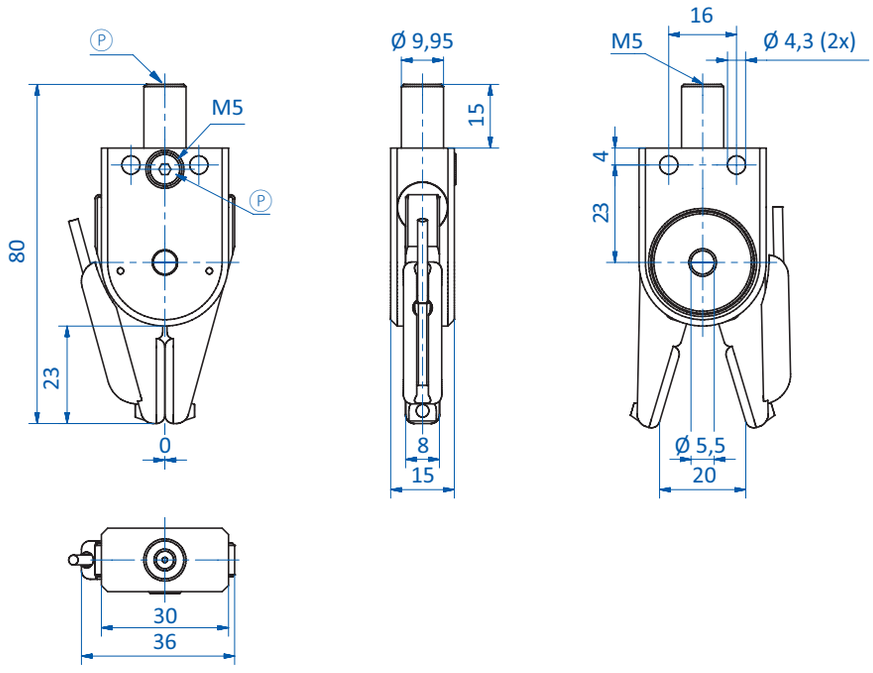

GR04.100H-2N | GR04.100H-2P

Ⓟ = Compressed air connection

Dimensions

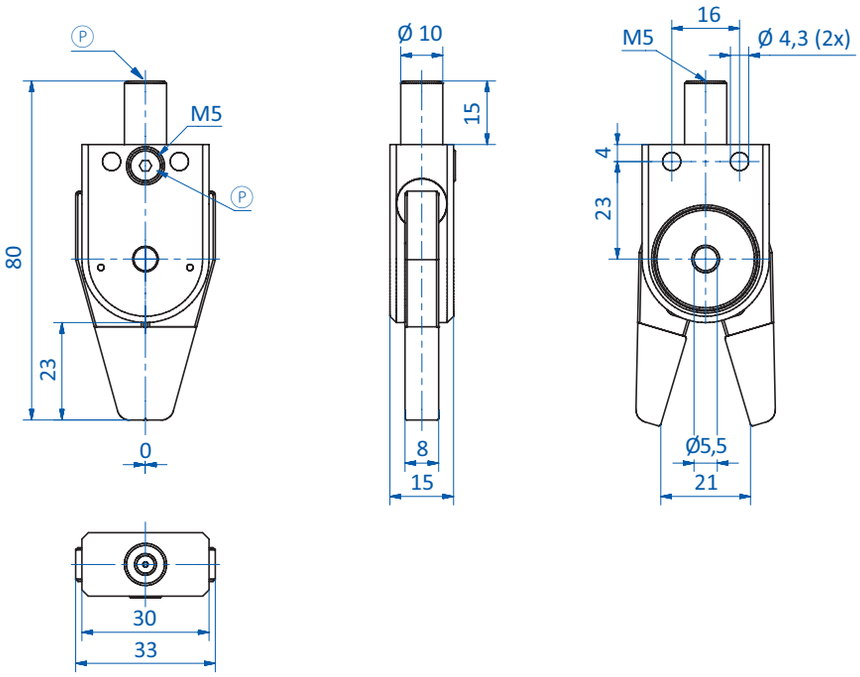

GR04.100HNBR

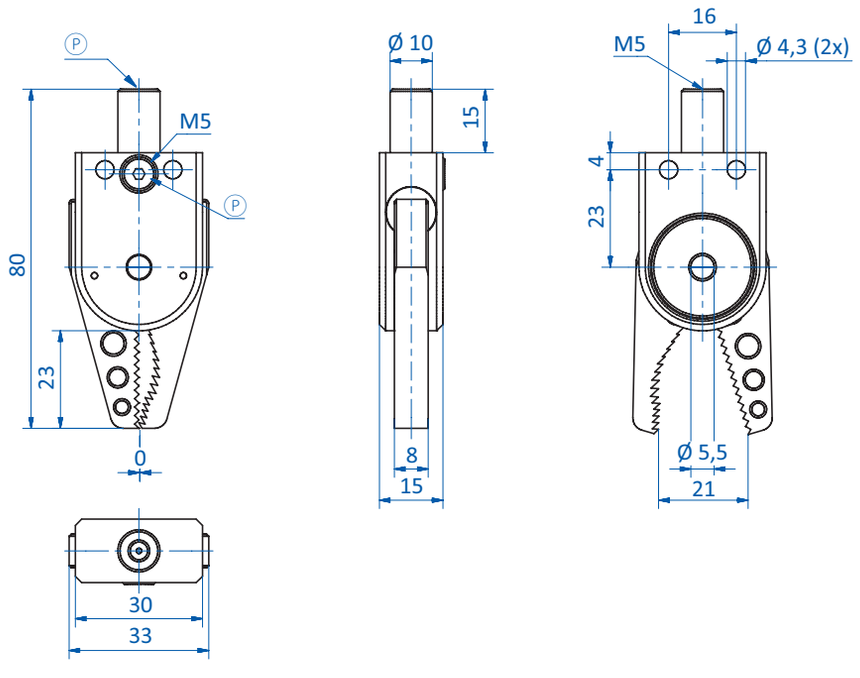

GR04.100B

Ⓟ = Compressed air connection

Dimensions

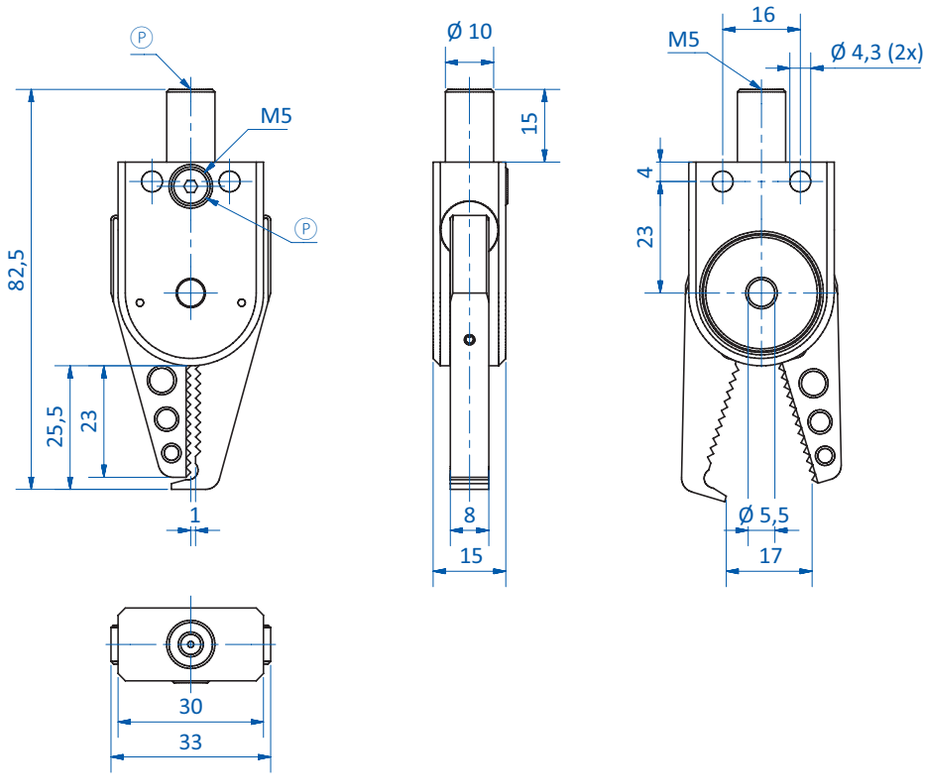

GR04.100P

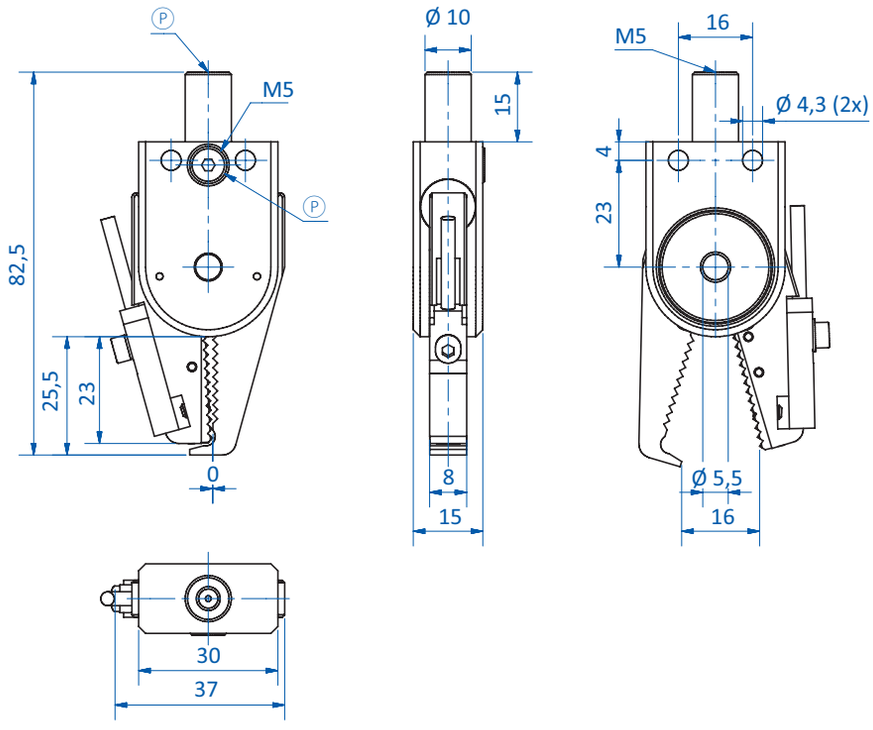

GR04.100P-1N | GR04.100P-1P

Ⓟ = Compressed air connection

Dimensions

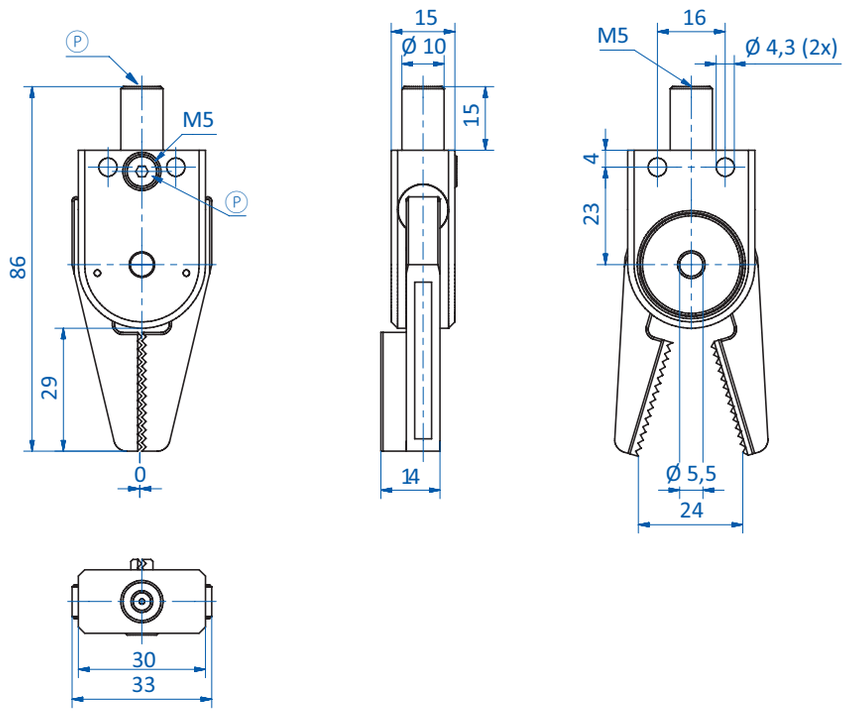

GR04.100XW

Ⓟ = Compressed air connection

Series 100 – sprue grippers, clamping diameter 10 mm – double-acting

Product notes

> Grippers with wide jaw opening for large gates
> Gap-free closing for flat gates
> Dual-action for short cycle times; opening and closing separately controllable
> Housings and gripper jaws consist of an anodized, high-strength aluminum alloy
> Spring-assissted opening
> Double-acting
> Medium: filtered and oiled/non-oiled air
> Ambient air temperature: -20°C to +80°C (-4 °F to 176 °F)

Technical data

Item no.	Jaw	Operating pressure [bar (psi)]	Sensor	Closing force at 6 bar (87 psi) [N]	Weight [g]	Suitable sprue wiper
GR04.102	Standard	2.5 - 8 (36.3 - 116)	without	20	51	GR04.100-30

Dimensions

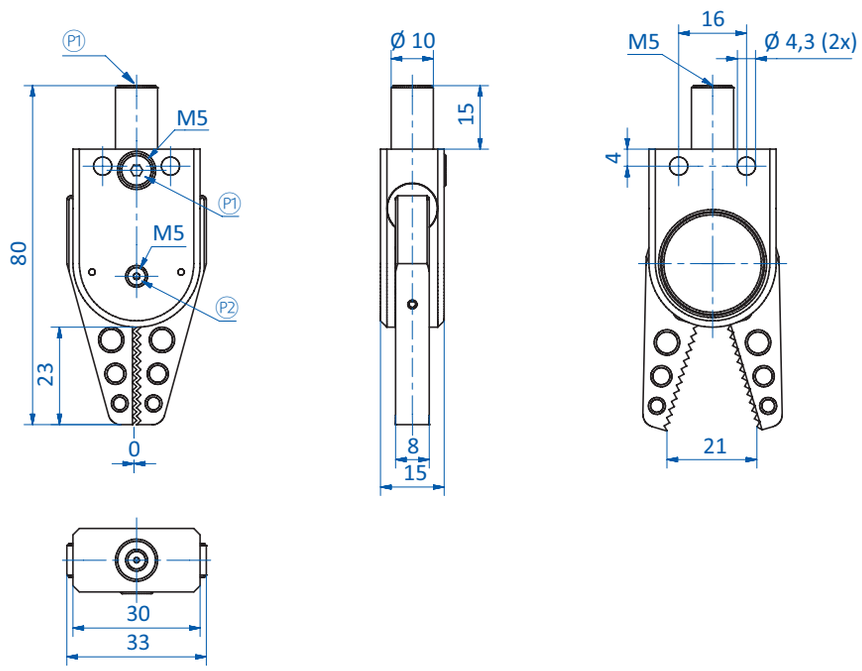

P1 = Compressed air supply (close) P2 = Compressed air supply (open)

Sprue wiper for gripper series 100

GR04.100-30 mounted on GR04.100

Product notes

> Sprues are centered between the gripper jaws before gripping
> Sprues are scraped off when the gripper jaws are reset
> Simple assembly: the sprue wiper is fixed to the gripper with 2 screws
> The sprue wiper fits most Series 100 grippers (see data sheet sprue gripper series 100)

Ordering notes

> The gripper is not included in the delivery, please order separately

Technical data

Item no.	Suitable for	Weight [g]
GR04.100-30	Sprue grippers - Series 100	31

Sprue wiper suitable for gripper series 100

> GR04.100
> GR04.100-1N
> GR04.100-1P
> GR04.100-3N
> GR04.100-3P
> GR04.100S
> GR04.100S-1N
> GR04.100S-1P
> GR04.100H
> GR04.100HNBR
> GR04.100B
> GR04.100P
> GR04.100P-1N
> GR04.100P-1P
> GR04.102

Grippers | Sprue grippers

Sprue wiper for gripper series 100

Mounting instructions

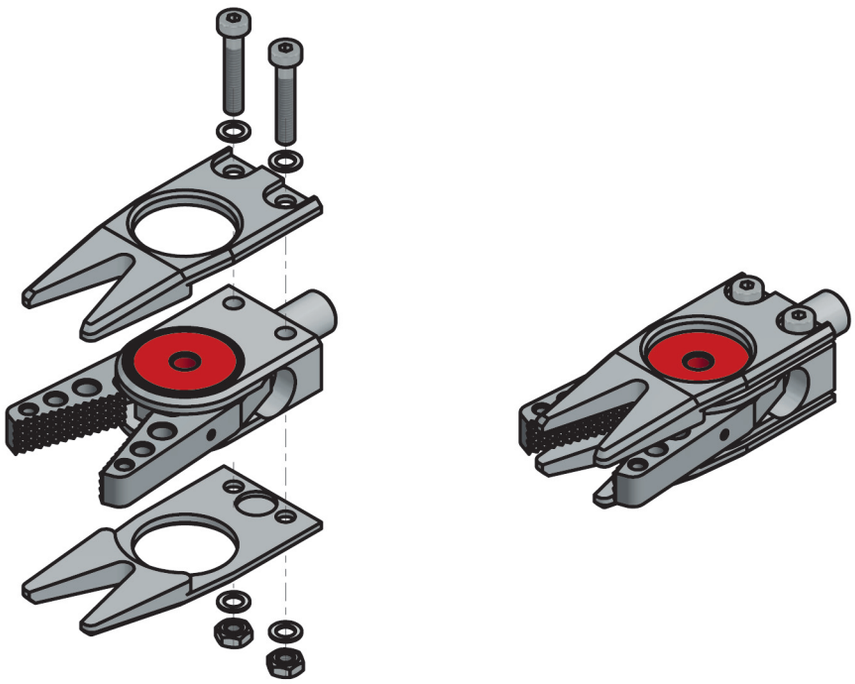

Dimensions

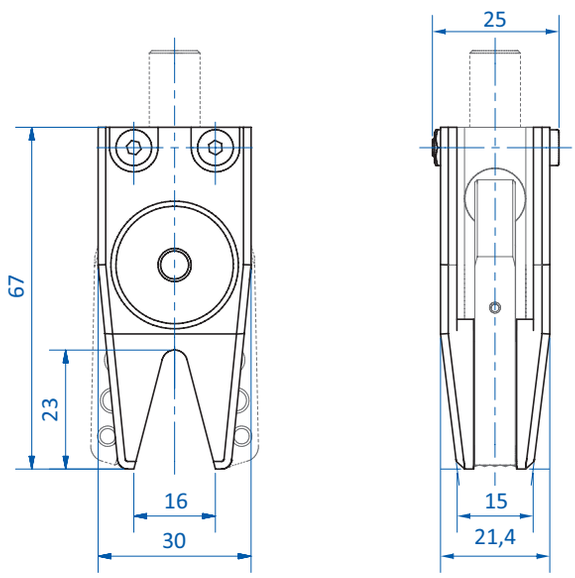

FIPA GmbH Headquarters | Germany | Phone: +49 89 962489-0 | www.fipa.com | info@fipa.com
FIPA Inc. | USA | Phone: +1 919 6519888 | www.fipa.com | sales.us@fipa.com

Interchangeable jaws for gripper GR04.100U

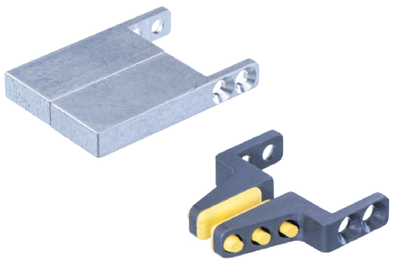

GR04.103-1 and GR04.103-4

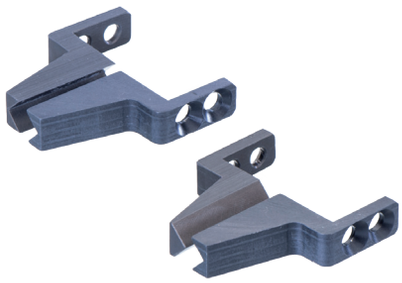

GR04.103-2 and GR04.103-3

Product notes

> Interchangeable jaws for gripper GR04.100U

Technical data

Item no.	Jaw design	Application benefit	Weight [g]	Replacement parts
GR04.103-1	Blank jaws	Aluminum-blanks: For customized jaw design	40	--
GR04.103-2	V-shape	Enables axial gripping of sprues	14	--
GR04.103-3	V-shape, prism shape	Enables three point contact when gripping conical sprues	14	--
GR04.103-4	Jaws with HNBR pads	2 x jaws with HNBR pads – gentle gripping of sensitive components. Temperature range 0 - 160 °C (0 - 320 °F) for short term contact – up to 30 seconds	14	GR04.103-4 HNBR

Dimensions

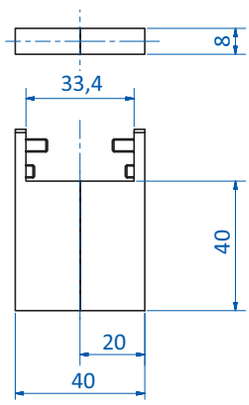

GR04.103-1

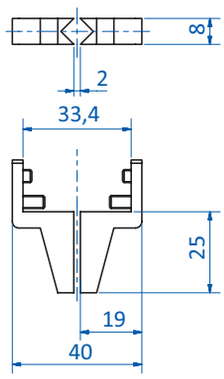

GR04.103-2

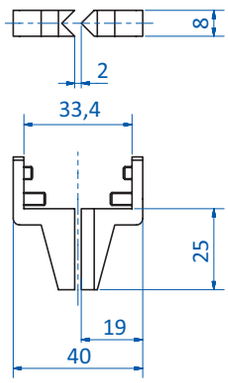

GR04.103-3

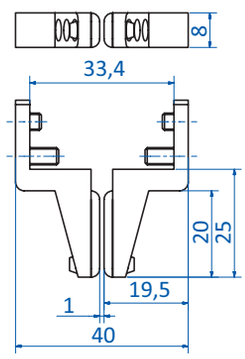

GR04.103-4